ORDER NOW



ELKAscan radar scanner

Time-consuming roadworks are a thing of the past: the ELKAscan radar scanner offers a clever alternative to induction loops and photoelectric barriers. Installation is simple, clean and can be carried out in just a few steps.

- ✔ **Alternative to induction loops and photoelectric barriers**
- ✔ **Easy installation without roadworks**
- ✔ **Insensitive to weather conditions**





ELKA

ELKAscan radar scanner

Small format, great performance



The alternative to photoelectric barriers and induction loops

With the high-performance ELKAscan radar-scanner, ELKA offers reliable technology for detecting the presence and movement of people and vehicles. It is ideal for entrances, parking garages, barrier systems and security areas. Especially in existing installations where pedestrian traffic cannot be ruled out, it enables safeguarding in accordance with EN 12453, Type D.

Detection is insensitive to weather conditions such as rain, snow, frost and fog, as well as to changing light conditions. The ELKAscan reliably detects the relevant area and enables precise monitoring, even at complex entrances.

For larger or more complex entrances, the monitoring area can be extended by adding a second ELKAscan. This allows entrances requiring detection from both sides to be monitored as well.

Virtual loops allow detection to be adjusted flexibly to suit the requirements of the individual application.

The device can be conveniently configured via bluetooth using the ***Scanner Assistant*** app (available for iOS and Android), regardless of the mobile device used.

Convince yourself of the advantages!

ELKA



ELKAscan radar scanner

Advantages at a glance

- Virtual induction loops without complex construction works
- Can be used as a safety device in accordance with EN 12453, Protection Level D
- Insensitive to weather and light conditions
- Resistant to attempts of manipulation
- Configurable direction detection and directional logic
- Easy installation and retrofitting of existing installations
- Flexible configuration of detection areas
- Range of up to 8m (6m to comply with EN 12453, Protection Level D)
- Compatible with the ELKA barrier series
  PARKING, INDUSTRIAL, TOLL
- Easy configuration using the „Scanner Assistant“ app

Benefits at a glance



ELKA

Convincing advantages

Large detection area

The ELKAscan has a horizontal and vertical monitoring angle of 120° each and an effective range of up to 8m.

The range varies depending on the application:
- **Vehicle detection:** The detection range is a maximum of 8m
- **Person detection:** The detection range is a maximum of 6m (to comply with EN 12453 Protection Level D)

By using a second ELKAscan and connecting the respective outputs in series, the monitoring area can be expanded to up to 180°.

Compact design, flexible installation

The ELKAscan combines sensor technology and signal processing in a compact housing. When used solely for safeguarding, it can be mounted directly on the housing door without additional accessories.

An optional mounting wedge provides a fixed inclination angle of 30° for optimal roadway detection.

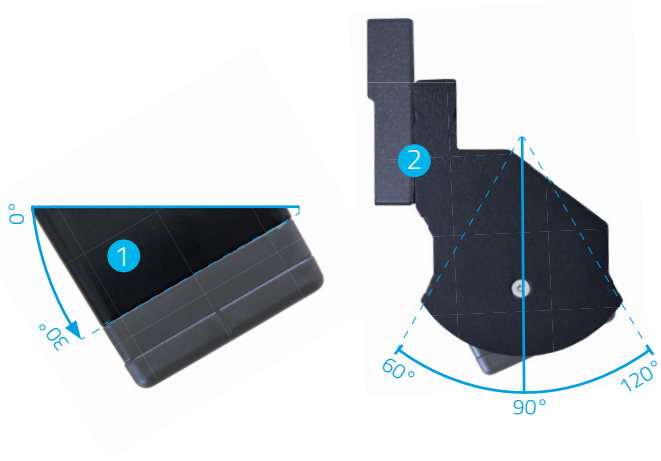

1 Mounting wedge 30°, fixed angle of 30°
2 Mounting bracket 60–120°, angle from –30° to 30°

Alternatively, the ELKAscan can be attached to the housing using a mounting bracket and swivelled horizontally from -30° to +30°.

Flexible detection areas

The ELKAscan has two configurable detection areas: an opening and presence area and a safety area beneath the barrier boom.

Both can be adjusted to the specific entrance configuration using the *Scanner Assistant* app.

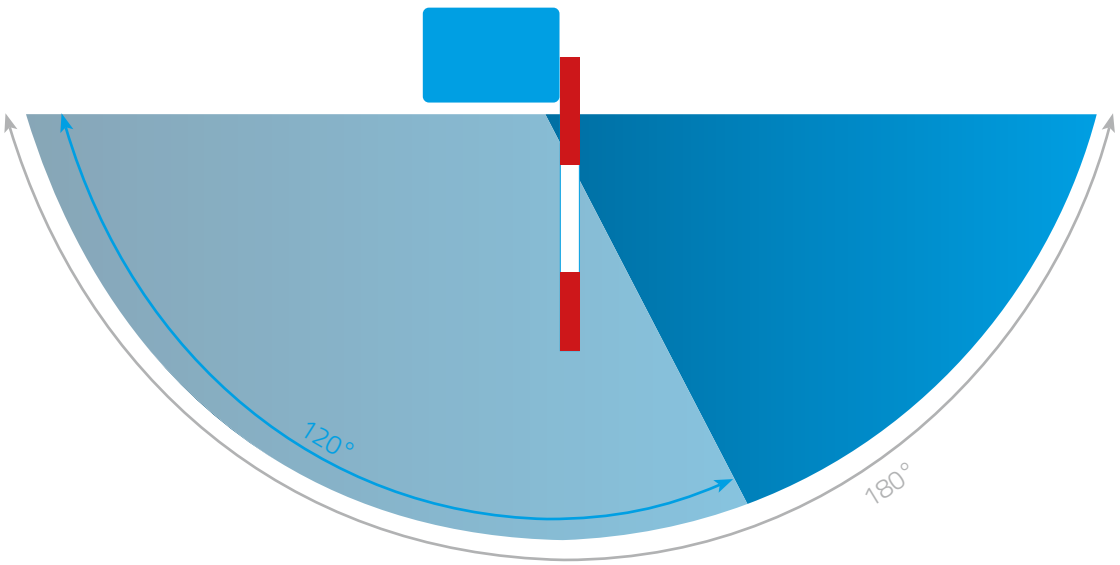

Detection angle with one radar scanner
Detection angle with two radar scanners connected in series

Convincing advantages

Convenient configuration via app

The ELKAscan can be conveniently configured via bluetooth using the ***Scanner Assistant*** app. A setup assistant guides users step by step through commissioning and enables individual adjustment of the detection areas as well as configuration of the switching outputs.

In addition, settings for object detection, direction of movement and status indication can be adjusted, and existing configurations can be loaded.

Intelligent directional logic

The ELKAscan has three relay outputs. Two outputs are assigned to the opening and presence area and the safety area, respectively, and indicate the status of each area.

The third output enables additional switching functions based on the detected states and movement sequences. For example, passage detection followed by a closing pulse or direction-dependent switching commands can be implemented.

Depending on the application, continuous or pulse commands can be configured.

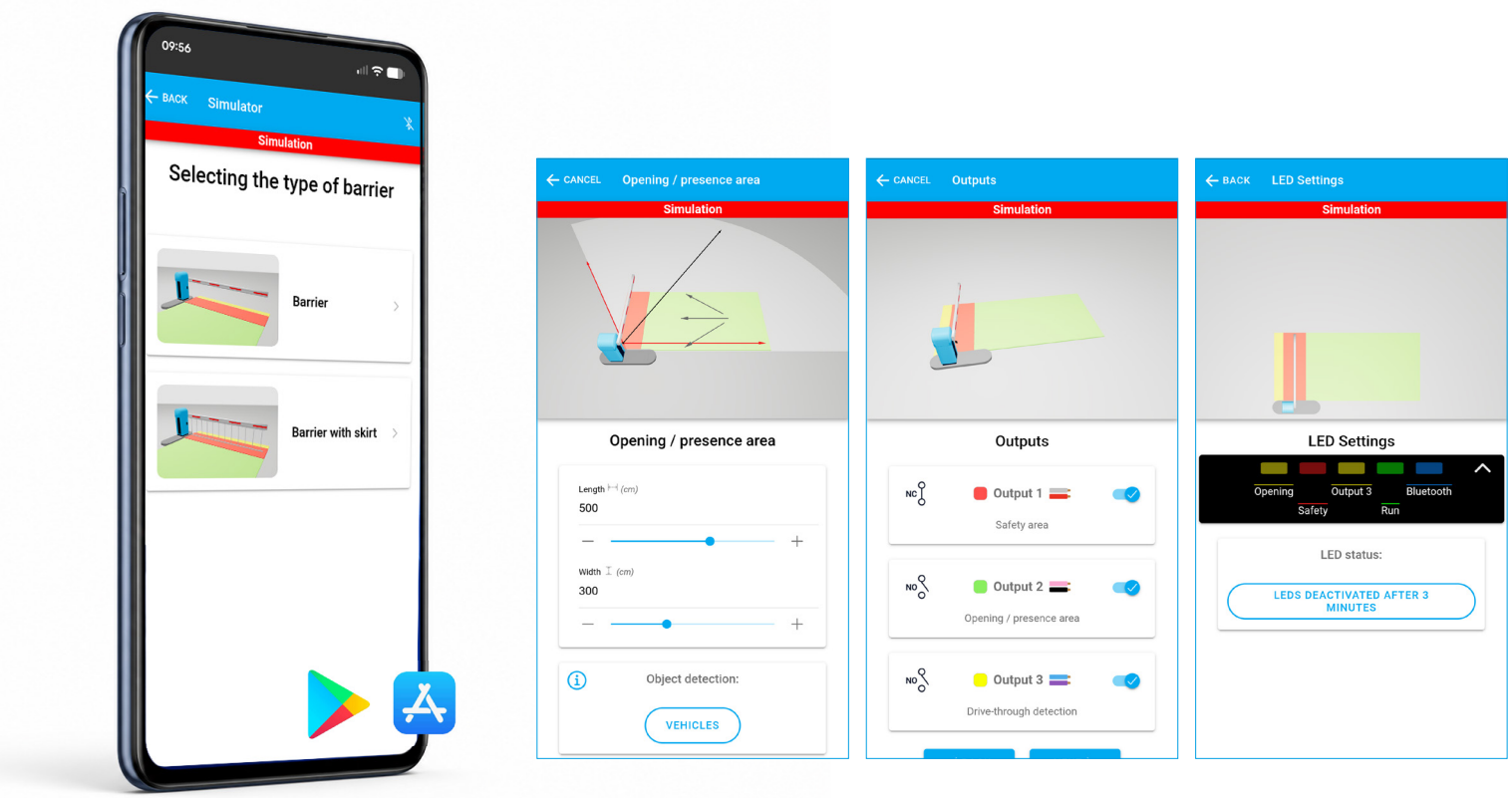

Intuitive operation
Guided setup and clearly structured configuration options

Visual configuration
View changes to the 3D model in real time

For iOS and Android
Available in seven languages

Configuration examples for series PARKING

The ELKAscan radar scanner can be mounted in various positions, allowing it to meet a wide range of requirements.

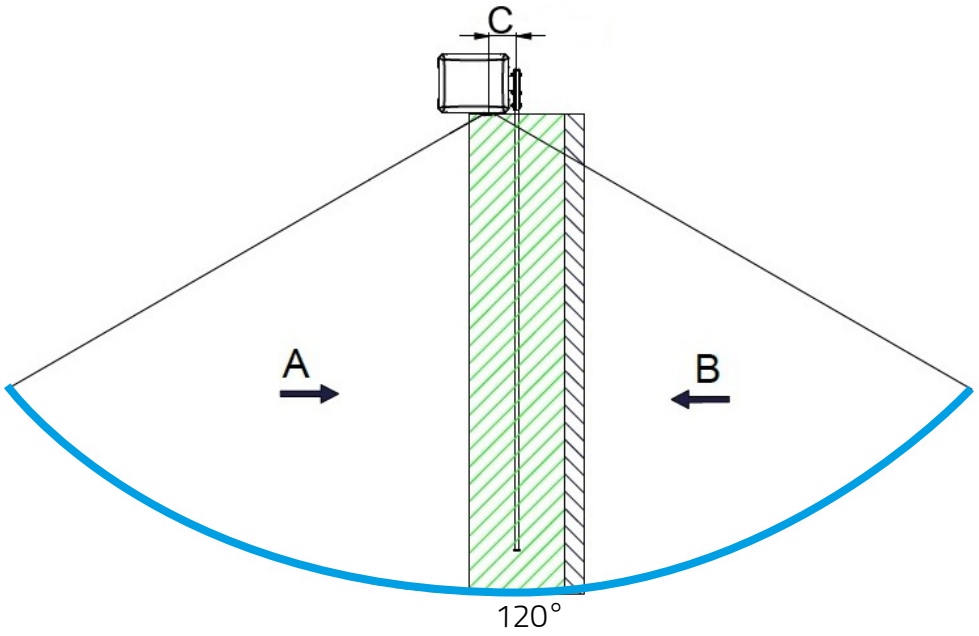

Detection area of the ELKAscan when installed on the barrier door without accessories for monitoring traffic passing on both sides.
Fixed angle of 0°.

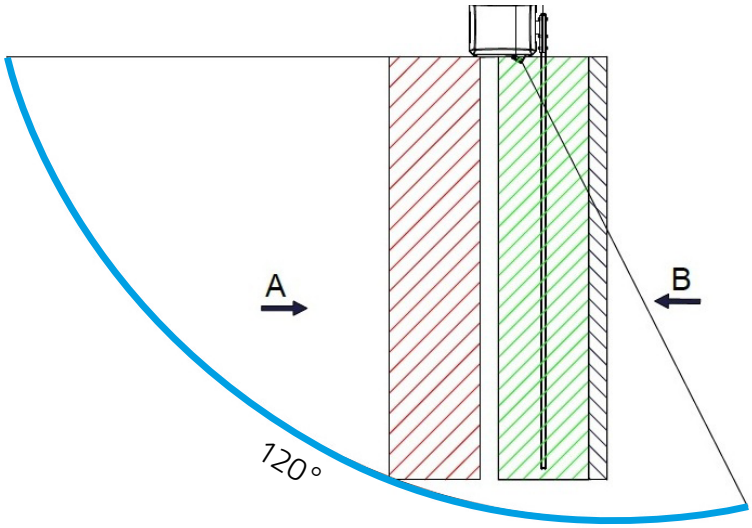

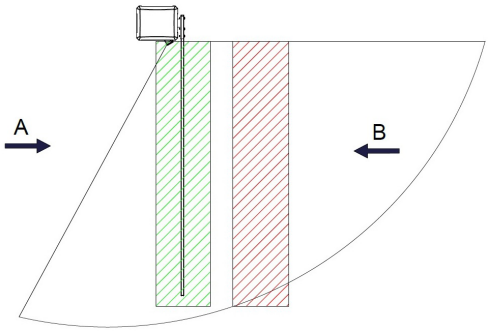

Detection area of the ELKAscan when installed on the barrier door using a mounting wedge to monitor traffic passing on both sides.
Fixed angle of +30° or -30°.

: Detection angle horizontal **A:** Direction of traffic 1 **B:** Direction of traffic 2

Configuration examples for series PARKING

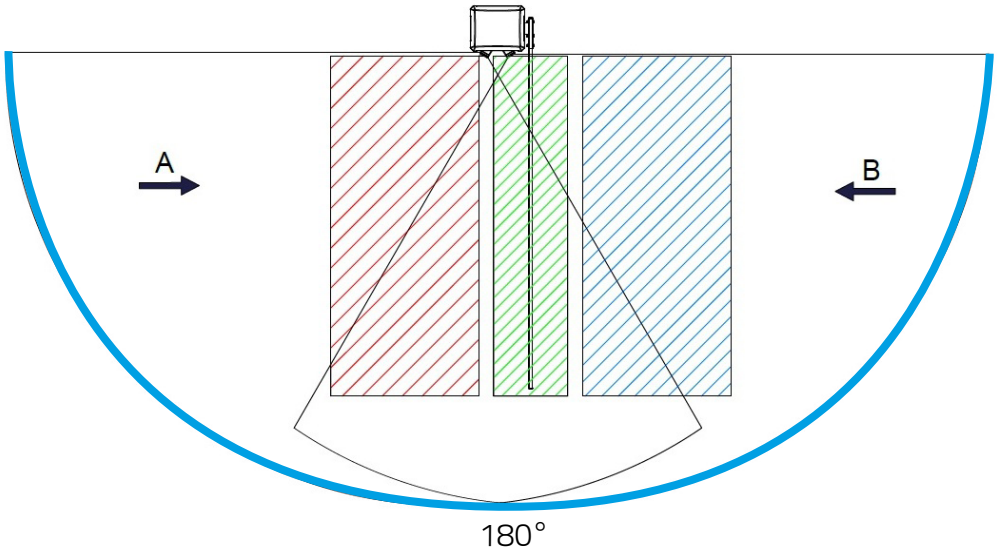

Detection area of the ELKAscan when two are installed on the barrier door using mounting wedges to monitor traffic passing on both sides. Fixed angles of 30° and -30°.

: Detection angle horizontal **A:** Direction of traffic 1 **B:** Direction of traffic 2

Configuration examples for series INDUSTRIAL

The ELKAscan radar scanner can be mounted in various positions, allowing it to meet a wide range of requirements. When used with a folding skirt, two ELKAscan radar scanners must be installed.

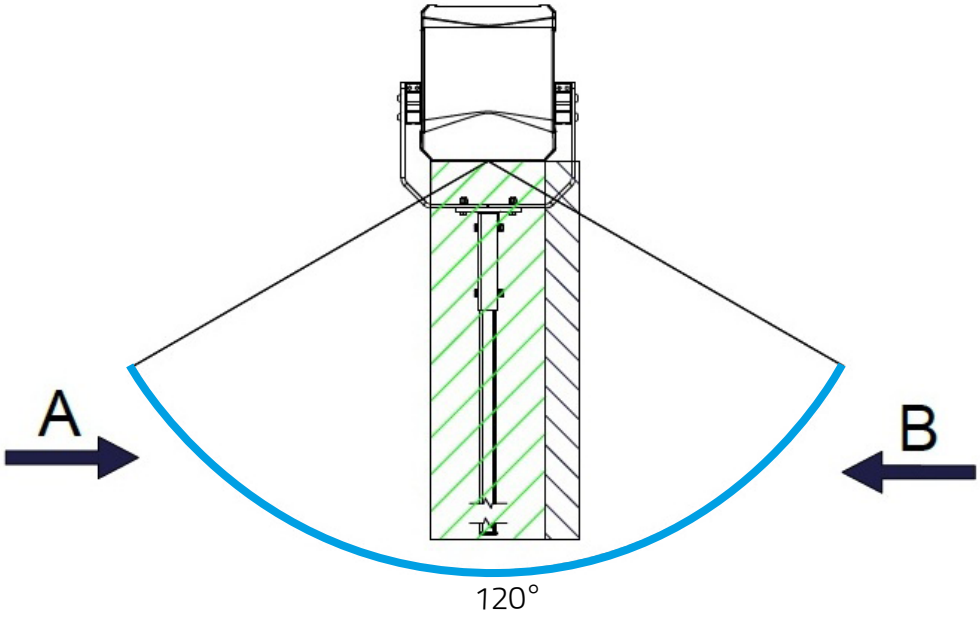

Detection area of the ELKAscan when installed on the barrier door without accessories for monitoring traffic passing on both sides.
Fixed angle of 0°.

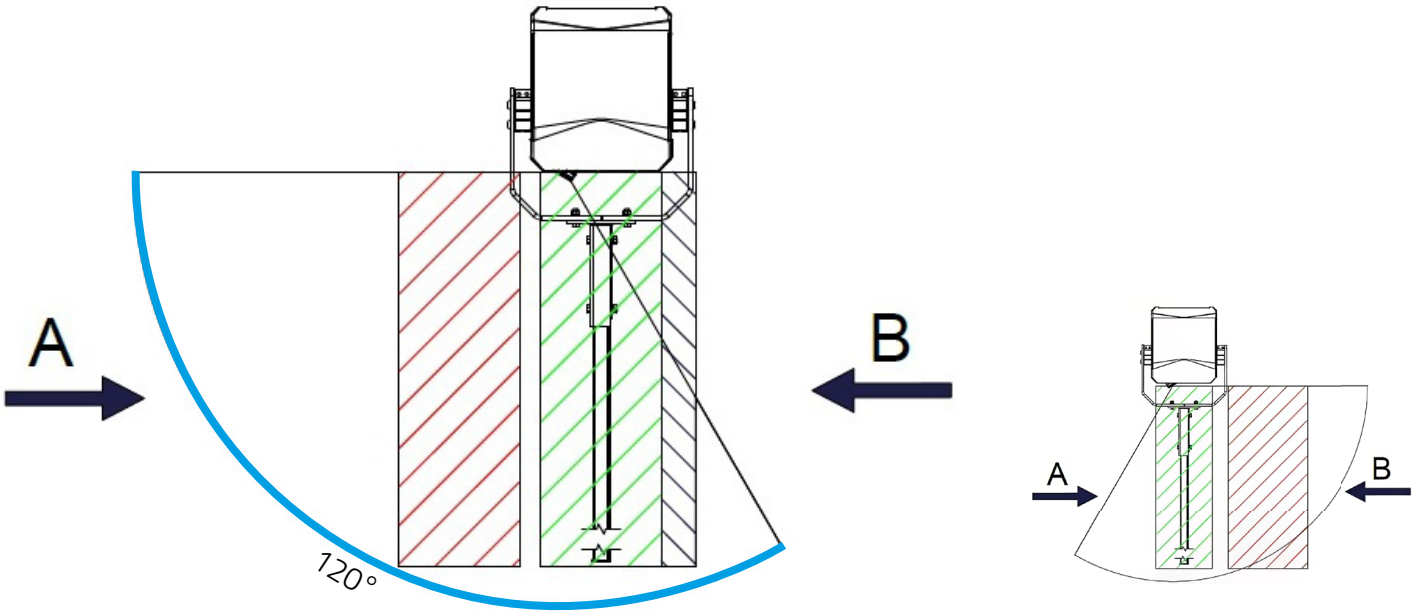

Detection area of the ELKAscan when installed on the barrier door using a mounting wedge to monitor traffic passing on both sides.
Fixed angle of +30° or -30°.

: Detection angle horizontal **A:** Direction of traffic 1 **B:** Direction of traffic 2

Configuration examples for series INDUSTRIAL

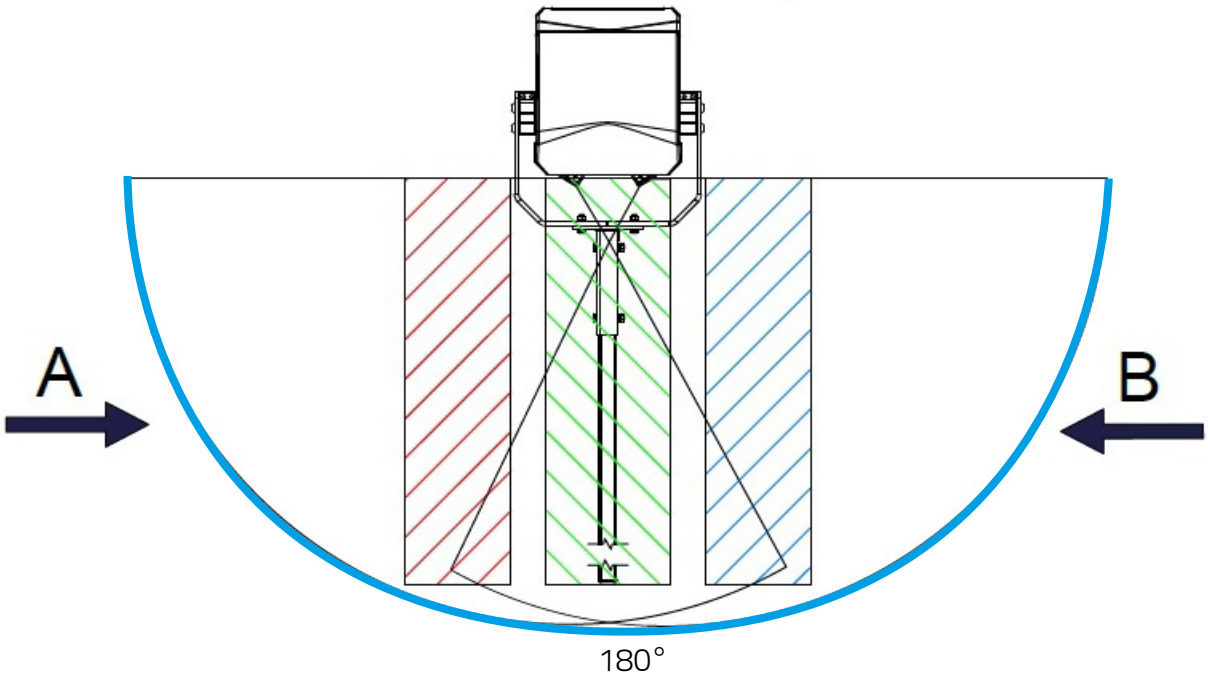

Detection area of the ELKAscan when two are installed on the barrier door using mounting wedges to monitor traffic passing on both sides.
Fixed angles of 30° and -30°.

ATTENTION:
For barriers fitted with HG 150, the ELKAscan Radar-Scanners must be installed on the foundation/concrete base in such a way as to ensure that the prescribed distance (between the road surface and the ELKAscan Radar-Scanner) is maintained.

: Detection angle horizontal **A:** Direction of traffic 1 **B:** Direction of traffic 2

Technical data

Data	ELKAscan radar scanner
Material	Front of the housing: PC Back of the housing: Aluminium
Dimensions radar scanner (W x H x D)	63.6 x 93.6 x 21.7mm (without accessories and connecting cable)
Protection class	IP65
Protection rating	III (SEL V)
Weight	approx. 300 g, including connecting cable
Outdoor temperature range	-30° to +55°C
Lagertemperaturbereich	-30° to +55°C
Humidity	< 95%, non-condensing
Transmit power	< 20dBm
Connections	10-pin connection cable, 0.25mm^2, length approx. 1.9m, open ends
Interface	Bluetooth V5.1
Radarfrequenz	60 - 64GHz, mmWave
Detection angle	horizontal and vertical angles +/-60° (total 120°)
Max. range for vehicle detection	8m
Max. range for pedestrian detection	6m (to comply with EN 12453, Protection Level D)
Max. object speed	30km/h
Operating voltage	9-30V DC
Current consumption	100mA
Power consumption	typ. 1.8W
Outputs	MOSFET-relay, potential-free
Elektrische Belastbarkeit	max. 30V DC, 20V AC
Durchgangswiderstand	R_{on} max. 15Ω
Reaktionsgeschwindigkeit	200ms, without restrictive filters
Eingang Testung	High-side (9–30 V DC) or low-side (GND) switching



ELKA TORANTRIEBE

For more than 45 years, ELKA stands for quality “Made in Germany”

As an experienced manufacturer, we develop high-quality barrier systems for parking lots, parking garages, commercial entrances and toll stations, robust traffic bollards for reliable protection in pedestrian zones and entrances, high-performance gate drive technology and suitable accessories for modern access control solutions - innovative and designed to meet the highest demands. Our products are developed and manufactured in Germany and are subject to strict quality controls - this enables us to achieve maximum reliability for daily use.

“Partner with competence” - this philosophy is firmly anchored in our corporate culture. Fast order processing, short delivery times and adherence to delivery dates are a matter of course for us. We supply to customers in over 80 countries worldwide and provide them with experienced advice. Our experts know every product in detail and are happy to support you in planning your projects. Contact us - we look forward to hearing from you.

You can find further information on our website: **www.elka.eu**

✔ Competent customer service **✔ Quality „Made in Germany“** **✔ Short delivery times and adherence to delivery dates**

ELKA-Torantriebe GmbH u. Co. Betriebs KG
Dithmarscher Str. 9, 25832 Tönning / Germany

info@elka.eu +49 (0) 4861-9690-0
www.elka.eu +49 (0) 4861-9690-90

Subject to change without prior notice.